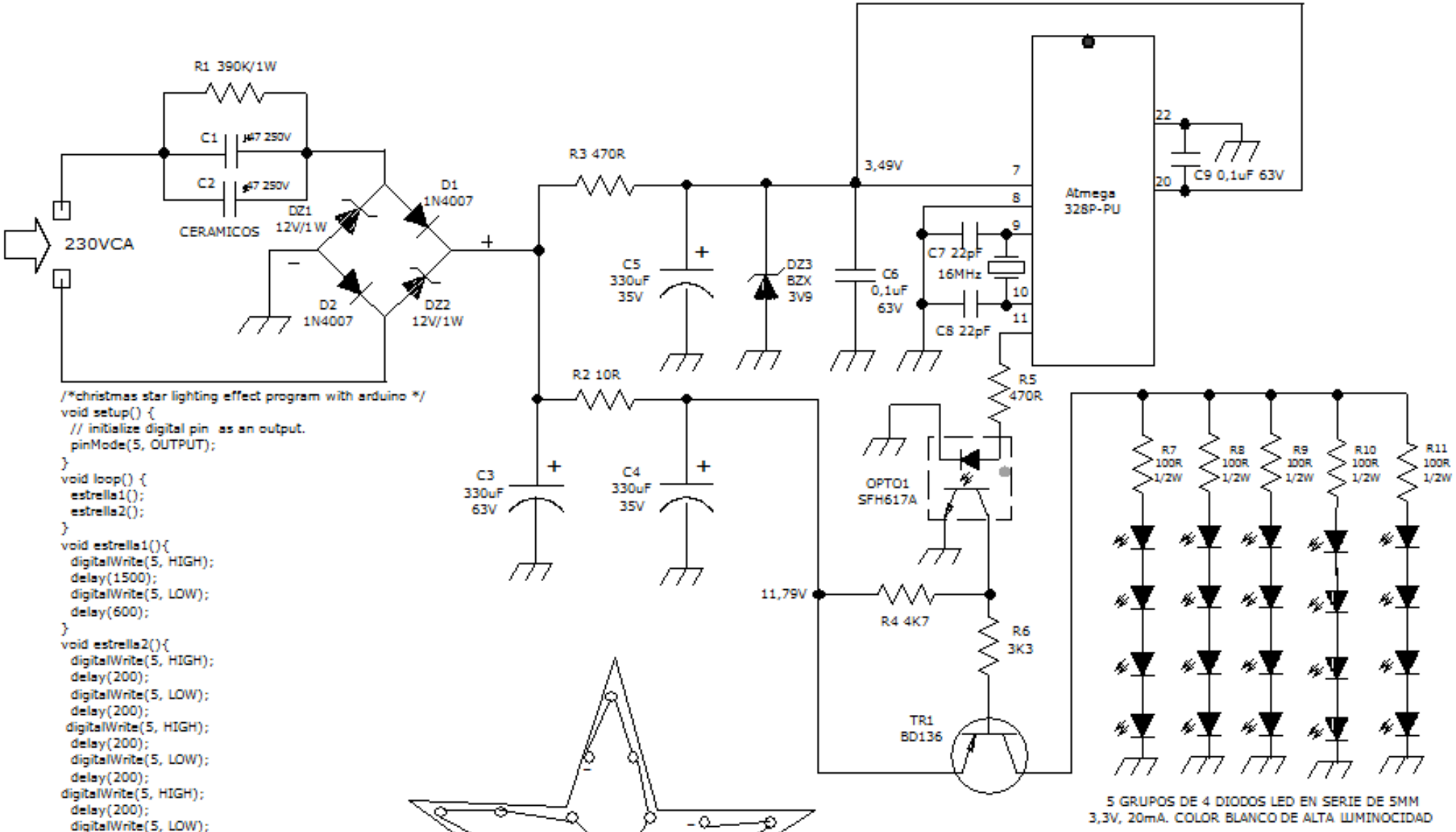


```
/*christmas star lighting effect program with arduino */
void setup() {
  // initialize digital pin  as an output.
  pinMode(5, OUTPUT);
}
void loop() {
  estrella1();
  estrella2();
}
void estrella1(){
  digitalWrite(5, HIGH);
  delay(1500);
  digitalWrite(5, LOW);
  delay(600);
}
void estrella2(){
  digitalWrite(5, HIGH);
  delay(200);
  digitalWrite(5, LOW);
  delay(200);
 digitalWrite(5, HIGH);
  delay(200);
  digitalWrite(5, LOW);
  delay(200);
digitalWrite(5, HIGH);
  delay(200);
  digitalWrite(5, LOW);
  delay(200);
    digitalWrite(5, HIGH);
  delay(100);
  digitalWrite(5, LOW);
  delay(100);
 digitalWrite(5, HIGH);
  delay(100);
  digitalWrite(5, LOW);
  delay(100);
digitalWrite(5, HIGH);
  delay(100);
  digitalWrite(5, LOW);
  delay(100);
}
```

CIRCUITO DE ILUMINACIÓN ESTRELLA DE NAVIDAD CON EFECTO ARDUINO

Plano:	Fecha: 14/01/2022	Nº de Hojas: 1/1
P-1199	Dibujado: Jose M. Castillo Castillo	